REV. D

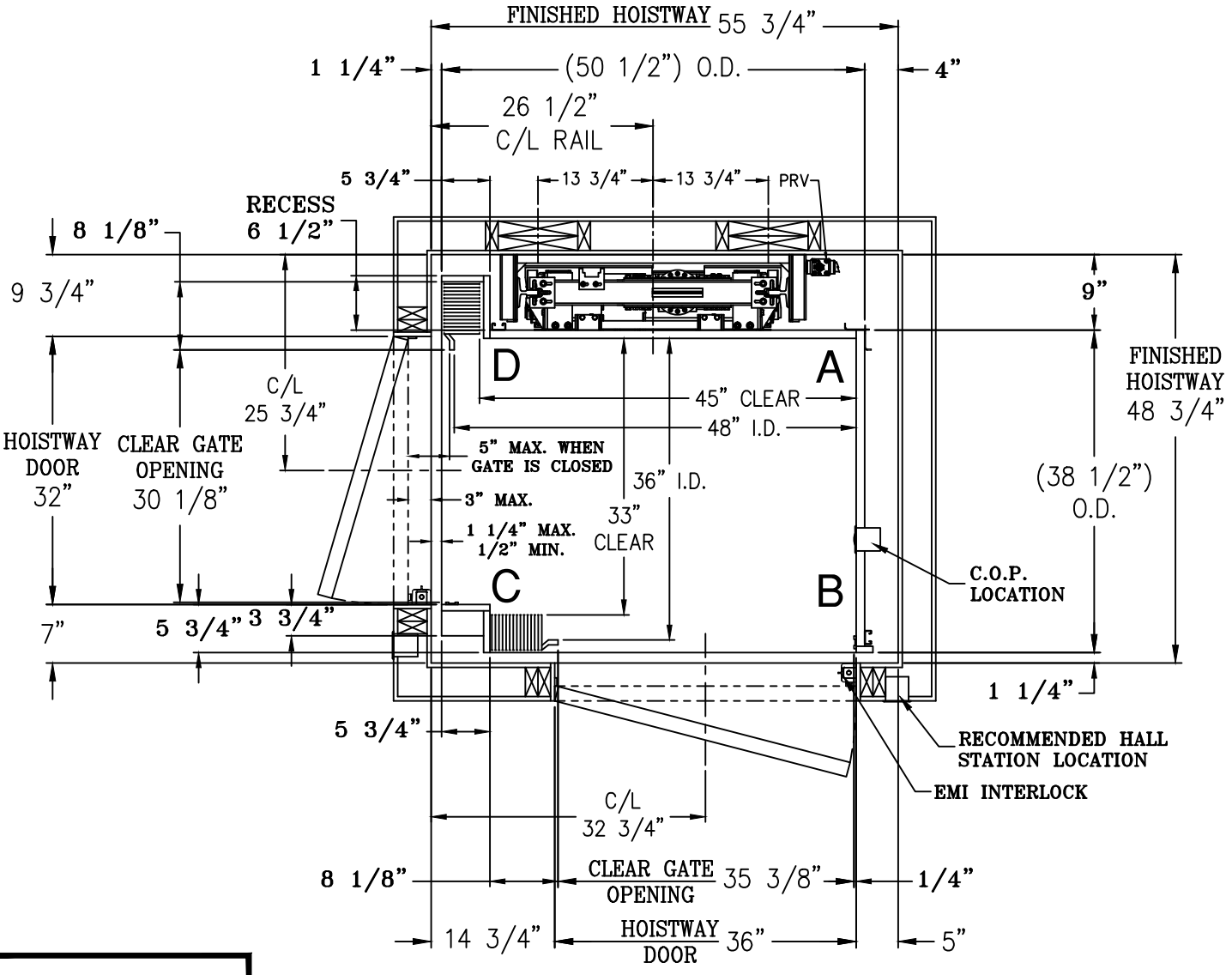

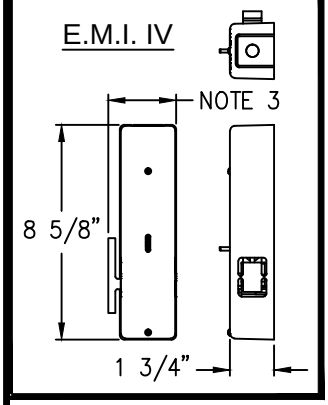

1) HOISTWAY BY OTHERS PER CODE. WALLS TO BE PLUMB AND SQUARE. ALL HOISTWAY DOORS BY OTHERS PER CODE.

2) FINISHED HOISTWAY = ROUGH FRAMING + DRYWALL + PLASTER + PAINT.

3) 2 7/8" MINIMUM WIDTH REQUIRED TO MOUNT LOCK TO JAMB.

Waupaca ELEVATOR COMPANY™
1726 North Ballard Road
Appleton, WI 54911
Phone: 800-238-8739

ELEVATOR CONTRACTOR:

JOB NAME: | ORDER NUMBER:

EXCELEVATOR SERIES
HYDRAULIC ELEVATOR
DCR CB OPENING W/ ACCORDION GATE

DRAWN BY:	DATE:	SIGNATURE OF APPROVAL	DWG. NO.
			C-002904